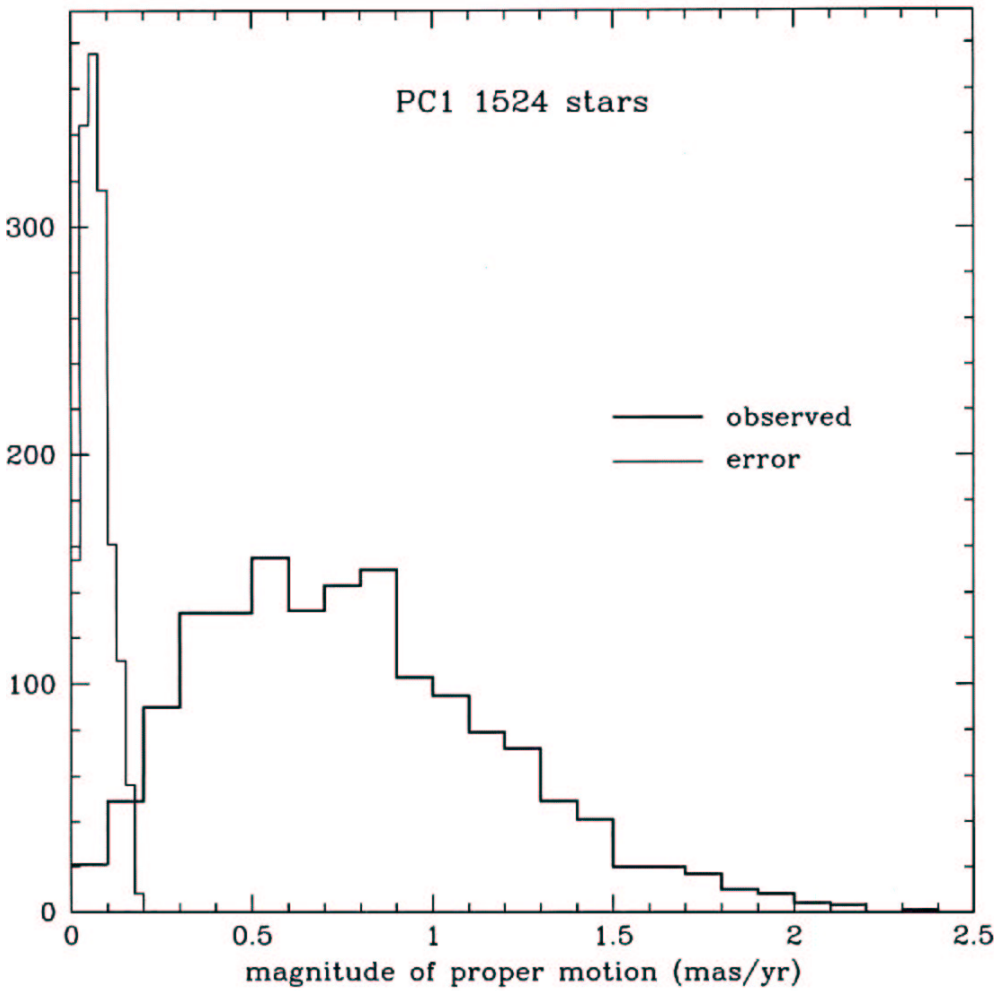
PC1 1524 stars
observed
error
0
100
200
300
0
0.5
1
1.5
2
2.5
magnitude of proper motion (mas/yr)

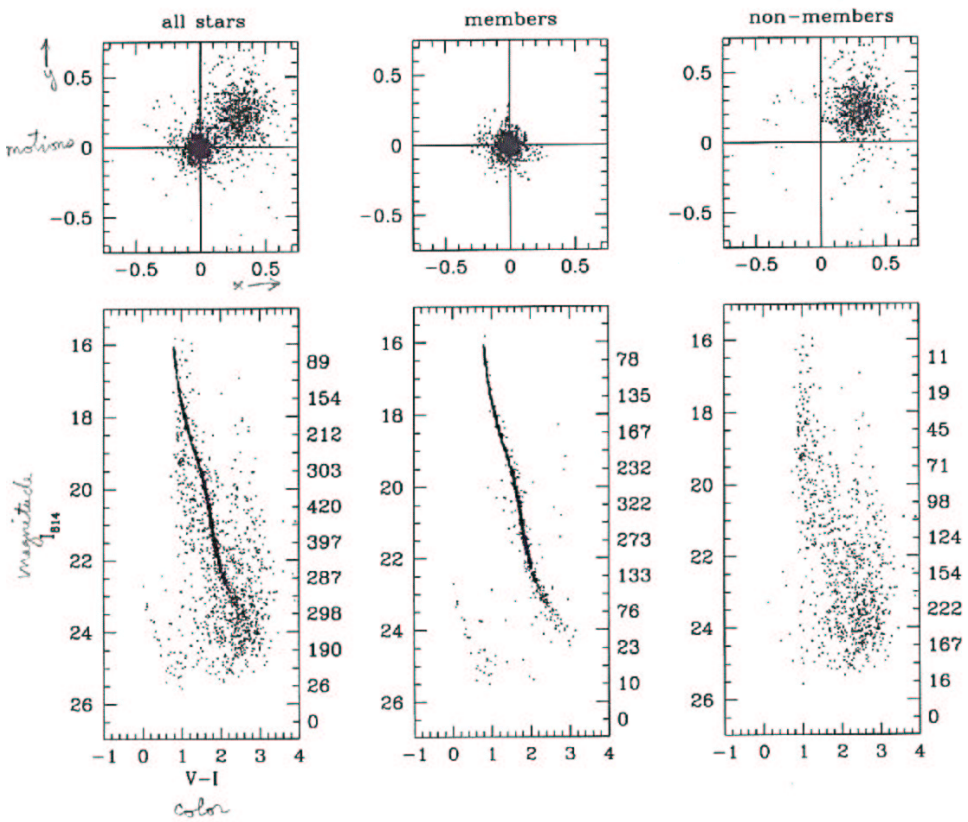
all stars
members
non−members
motions
x
V−I
color
magnitude

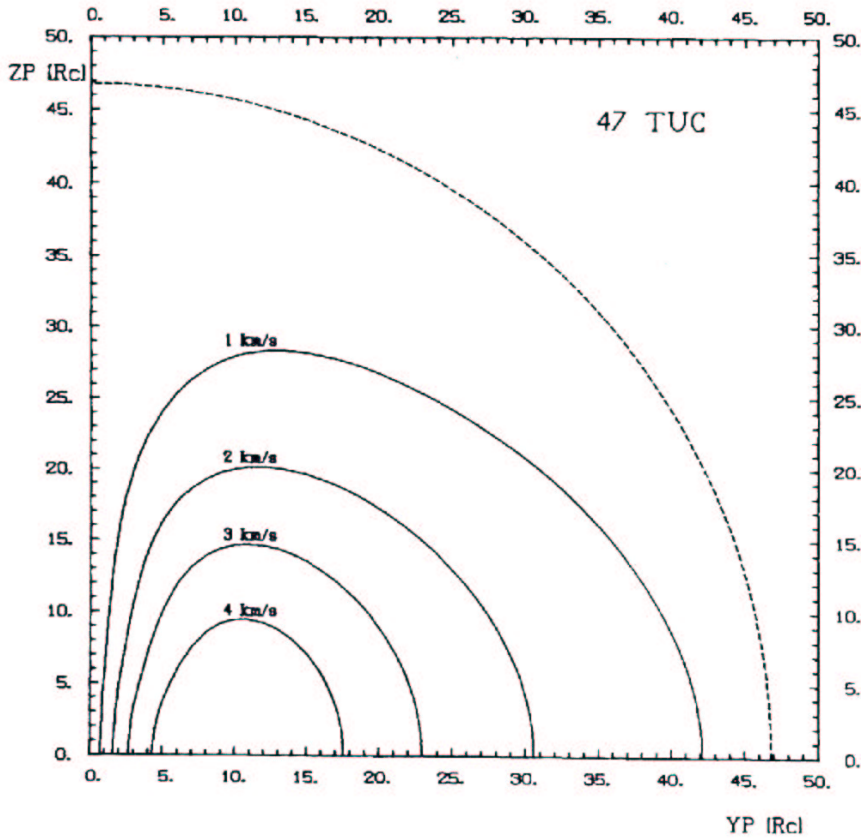
47 TUC
1 km/s
2 km/s
3 km/s
4 km/s
ZP (Rc)
YP (Rc)
0. 5. 10. 15. 20. 25. 30. 35. 40. 45. 50.

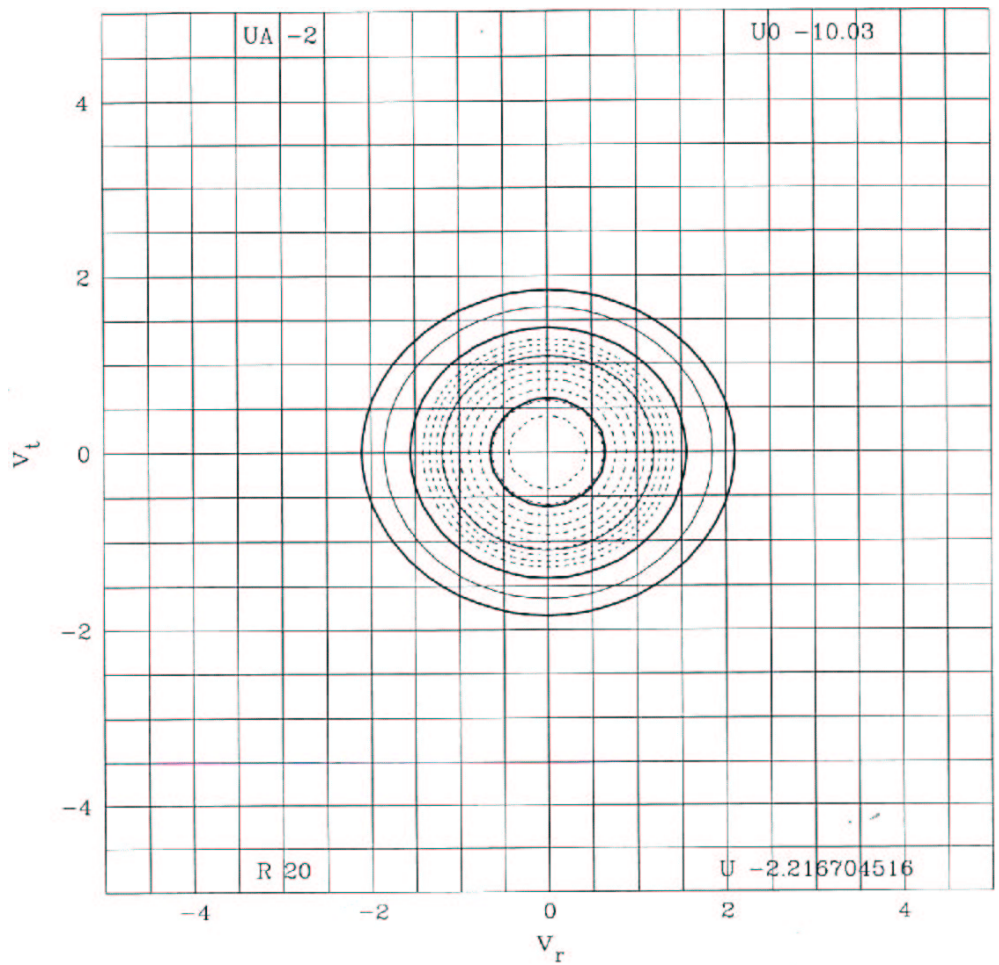
UA -2
U0 -10.03
R 20
U -2.216704516
V_t
V_r
4
2
0
-2
-4

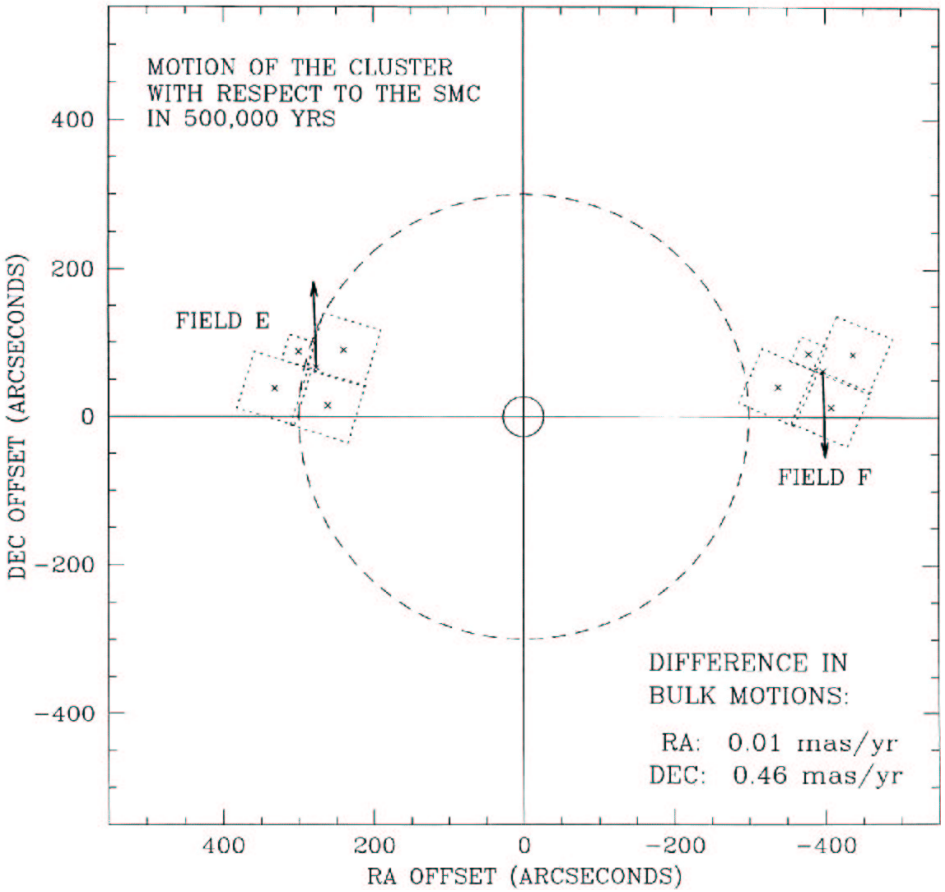
MOTION OF THE CLUSTER
WITH RESPECT TO THE SMC
IN 500,000 YRS
FIELD E
FIELD F
DIFFERENCE IN
BULK MOTIONS:
RA: 0.01 mas/yr
DEC: 0.46 mas/yr
DEC OFFSET (ARCSECONDS)
RA OFFSET (ARCSECONDS)
400
200
0
−200
−400