Real-time physics in far-from-equilibrium many-body states

Raghu Mahajan
Stanford University

1411.7950 with Matthew Hastings

The General Problem

- Consider a quantum many-body system with a chaotic Hamiltonian.

- We start out the system in some initial state that is a simple product state. This state has a high energy, and is far from equilibrium.

- Goal: Compute a few-body observable $\langle \mathcal{O}(t) \rangle$ at a later time.

- ***<u>Extremely</u>*** hard problem.

1D Spin Chains

N spin-1/2's arranged in a line

Large Hilbert Space $\mathcal{H} = (\mathbb{C}^2)^{\otimes N}$

Chaotic local Hamiltonian

$$H = \sum_i Z_i Z_{i+1} + 0.5 \sum_i Z_i - 1.05 \sum_i X_i$$

The Challenge

○ ○ ○ ○ ○ ○ ○ ○ ○ ○ ○ ○

$$H = \sum_i Z_i Z_{i+1} + 0.5 \sum_i Z_i - 1.05 \sum_i X_i$$

- Start with a product state, which is a high energy state, and very far from equilibrium:

$$|\psi(t=0)\rangle = |X+\rangle^{\otimes N}$$

- **Challenge**: Compute $\langle \psi(t) | X_{N/2} | \psi(t) \rangle$

The Challenge

Ising Model

(Banuls, Hastings, Verstraete, Cirac)

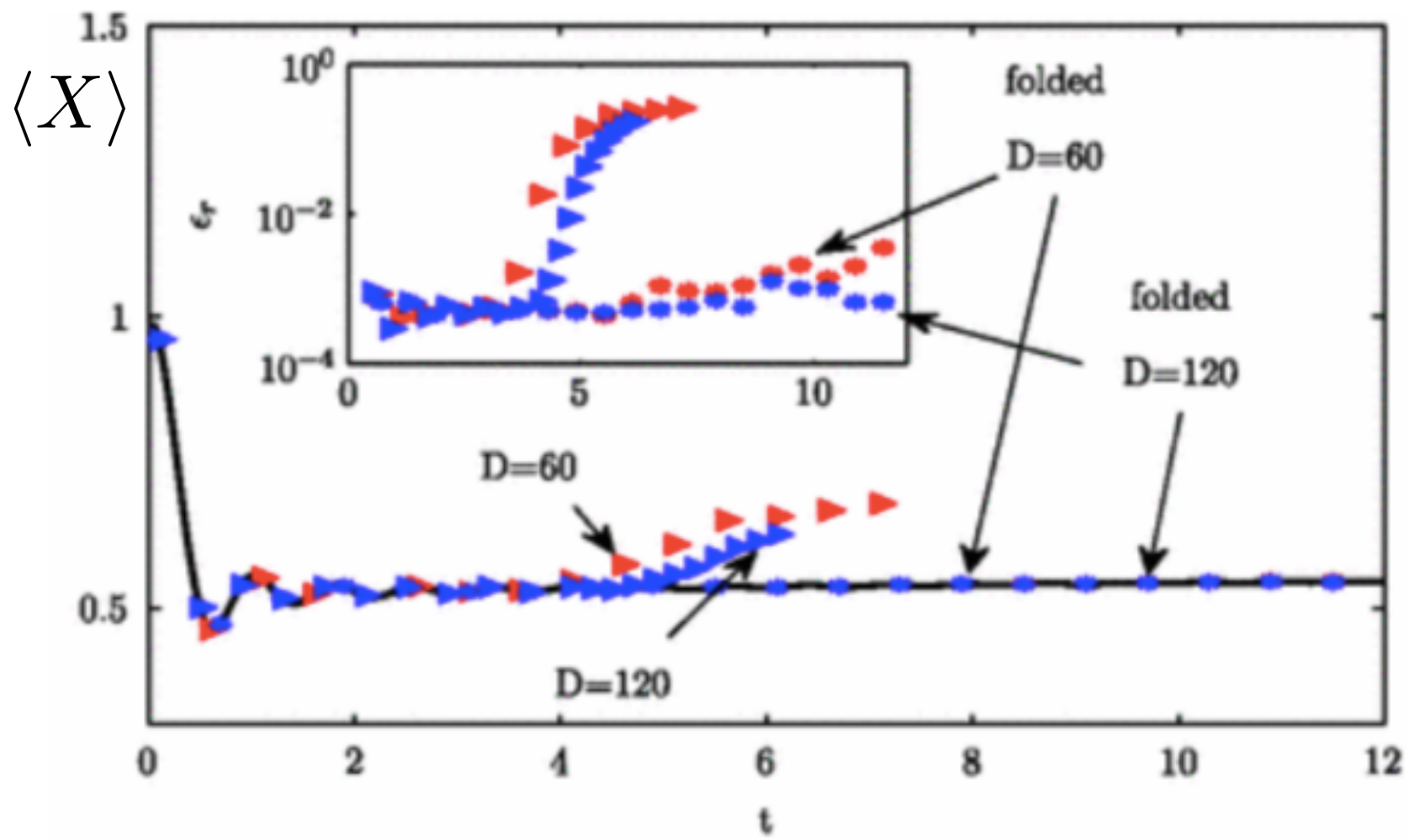

Matrix Product States

$$\sigma \in \{0, 1\} \quad i \in \{1, \ldots, N\}$$

$$|\psi\rangle = \sum_{\sigma_1, \ldots \sigma_n} c(\sigma_1, \ldots, \sigma_N) |\sigma_1 \ldots \sigma_N\rangle$$

<u>*Definition*</u>*:* The state $|\psi\rangle$ is said to be a ***Matrix Product State (MPS)*** if there exist matrices $A(i, \sigma)$ such that

$$c(\sigma_1, \ldots, \sigma_N) = \mathrm{Tr}\left[A(1, \sigma_1) \ldots A(N, \sigma_N)\right]$$

MPS Examples

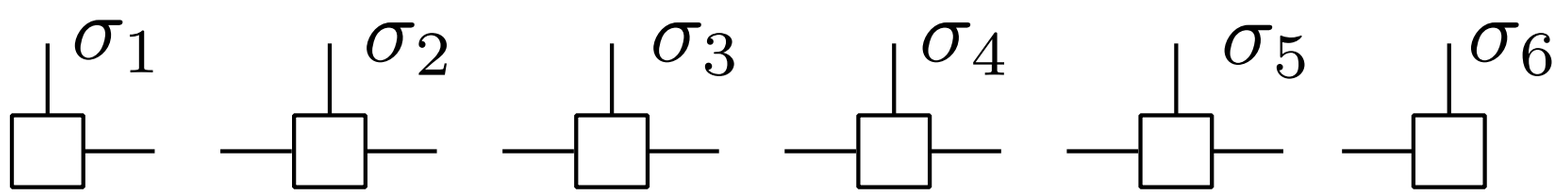

- Ex1: All spins pointing in the Z direction $|0\ldots0\rangle$
- Ex2: All spins pointing in the X direction $(|0\rangle + |1\rangle)^{\otimes N}$
- Ex3: GHZ state $|0\ldots0\rangle + |1\ldots1\rangle$
- **Bond dimension**

Matrix Product States

- **Theorem:** All states in $\mathcal{H}$ are Matrix Product States
- A generic state will require extremely large matrices to capture the entire state: $\log \mathrm{bd} \geq S_{\mathrm{EE}}$
- But on a computer, bdmax = 512 (say)
- **Theorem:** Ground states of <u>*gapped*</u> <u>*local*</u> *Hamiltonians in 1D* can be written accurately as MPS of bond dimension of order $O(N^0)$

Time Evolution with MPS

Apply Trotter-Suzuki decomposition on $\exp(-iHdt)$

$$\exp(\epsilon Z_i Z_{i+1}) = \cosh\epsilon + \sinh\epsilon\, Z_i Z_{i+1}$$

$$\exp\left(\epsilon(Z_1 Z_2 + Z_2 Z_3 + \ldots Z_N Z_1)\right) =$$

$$\sum_{k_1 \ldots k_N} \mathrm{Tr}\left(C(k_1)\ldots C(k_N)\right) \times Z_1^{k_1} \ldots Z_N^{k_N}$$

$$C(0) = \begin{pmatrix} \cosh\epsilon & 0 \\ 0 & \sinh\epsilon \end{pmatrix} \quad C(1) = \begin{pmatrix} 0 & \sqrt{\cosh\epsilon\sinh\epsilon} \\ \sqrt{\cosh\epsilon\sinh\epsilon} & 0 \end{pmatrix}$$

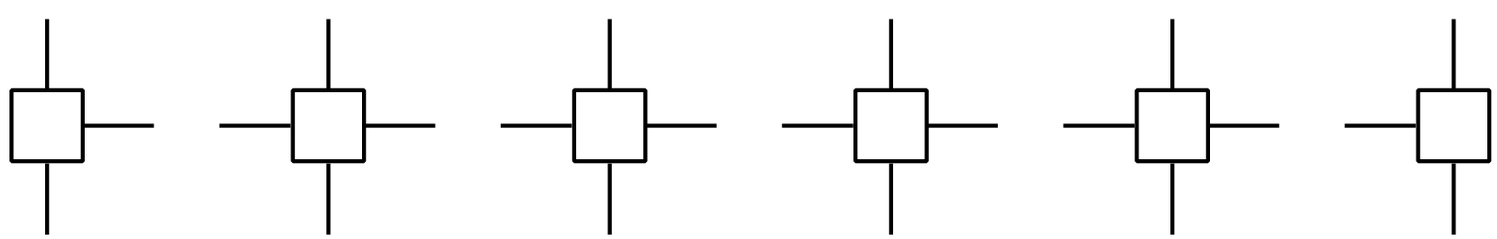

Time Evolution with MPS

Contract this network to get $\langle X_{N/2}(t) \rangle$

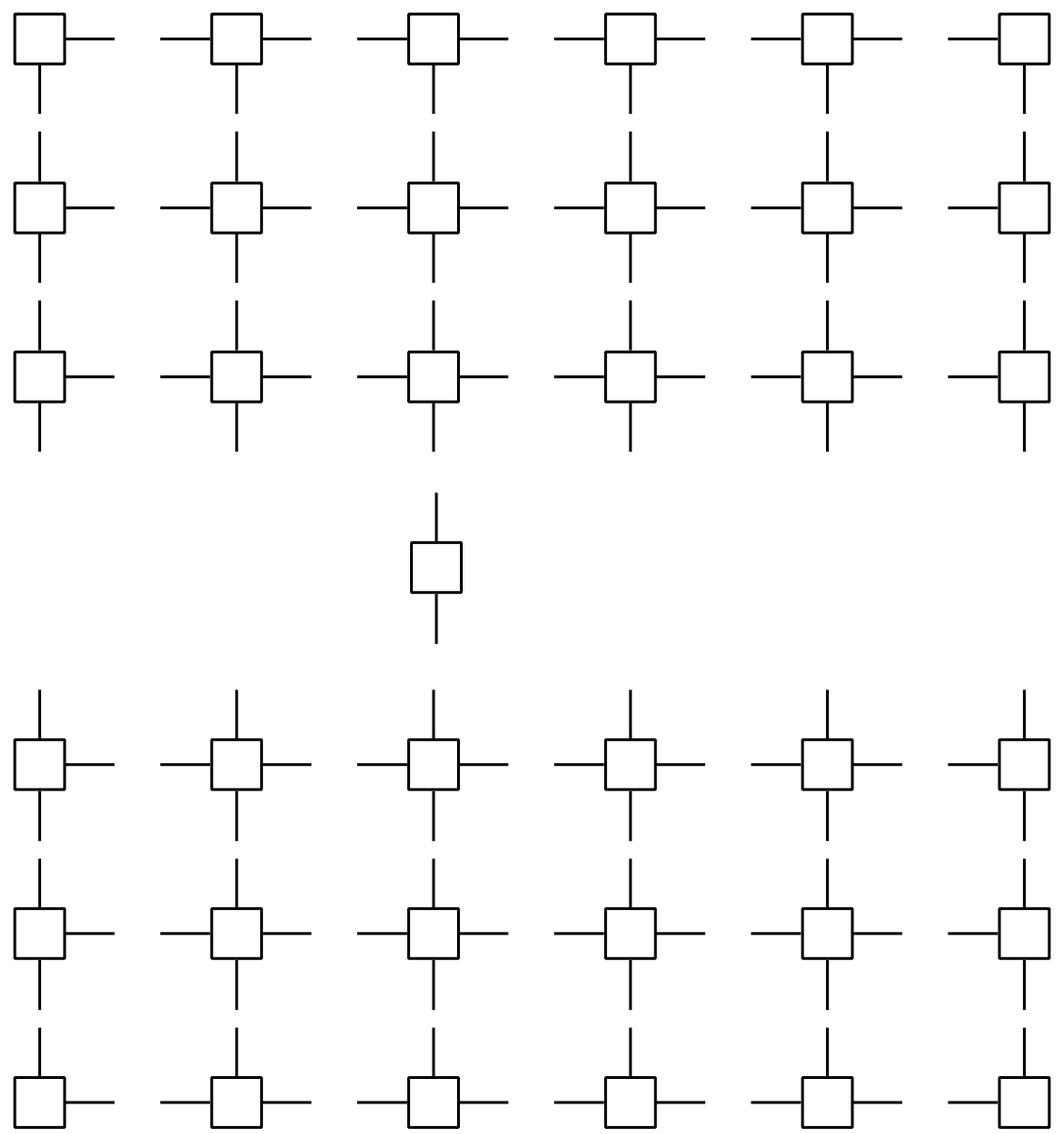

Time Evolution with MPS

Problem: Bond dimension doubles after each *dt*

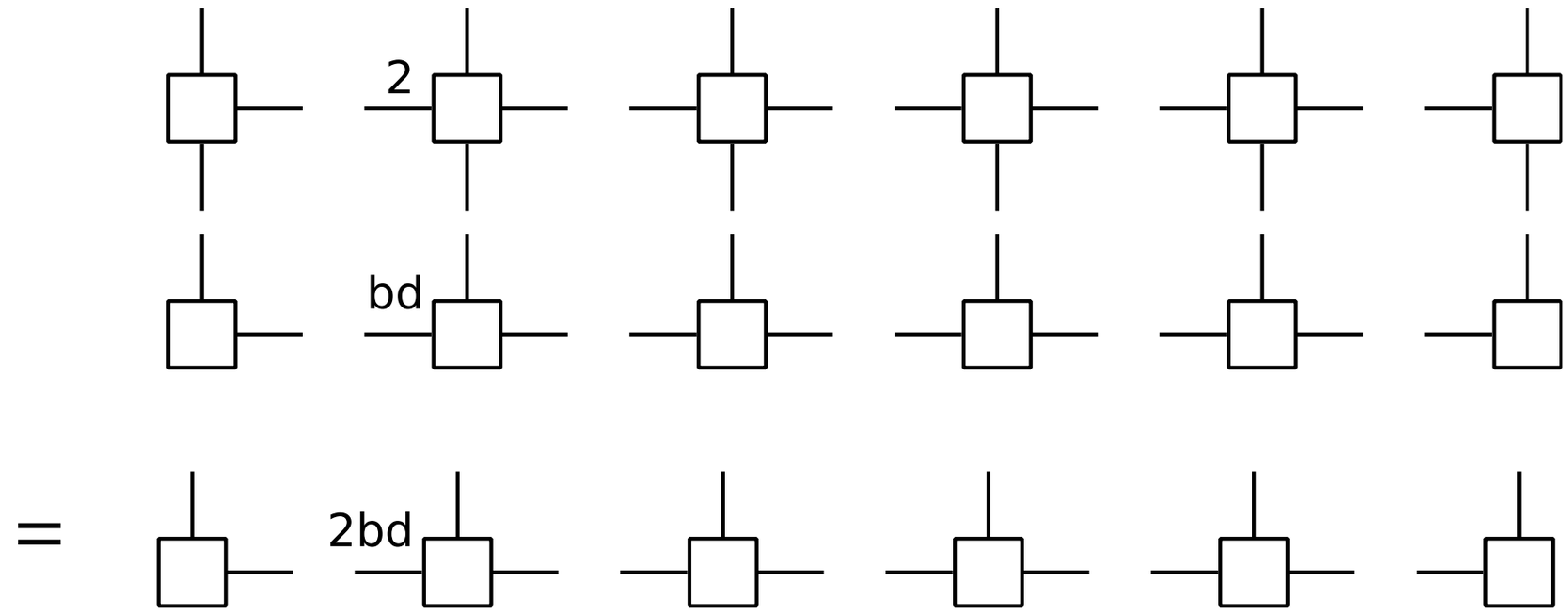

Start with bd=1, reach bdmax=512 in 9 *dt*'s

Need to truncate the matrices!

How to truncate?

- Truncation methods form the heart of MPS based algorithms

- One method is to keep the largest singular values across every cut (iTEBD). Yields excellent results for Euclidean evolution

- No matter how clever we are in truncating, the real-time case will break down eventually since $S_{\mathrm{EE}} = vt$

- <u>Modest Goal</u>: ***Can we find a better contraction and/or truncation scheme that will allow us to go on for a longer time?***

Linear EE growth

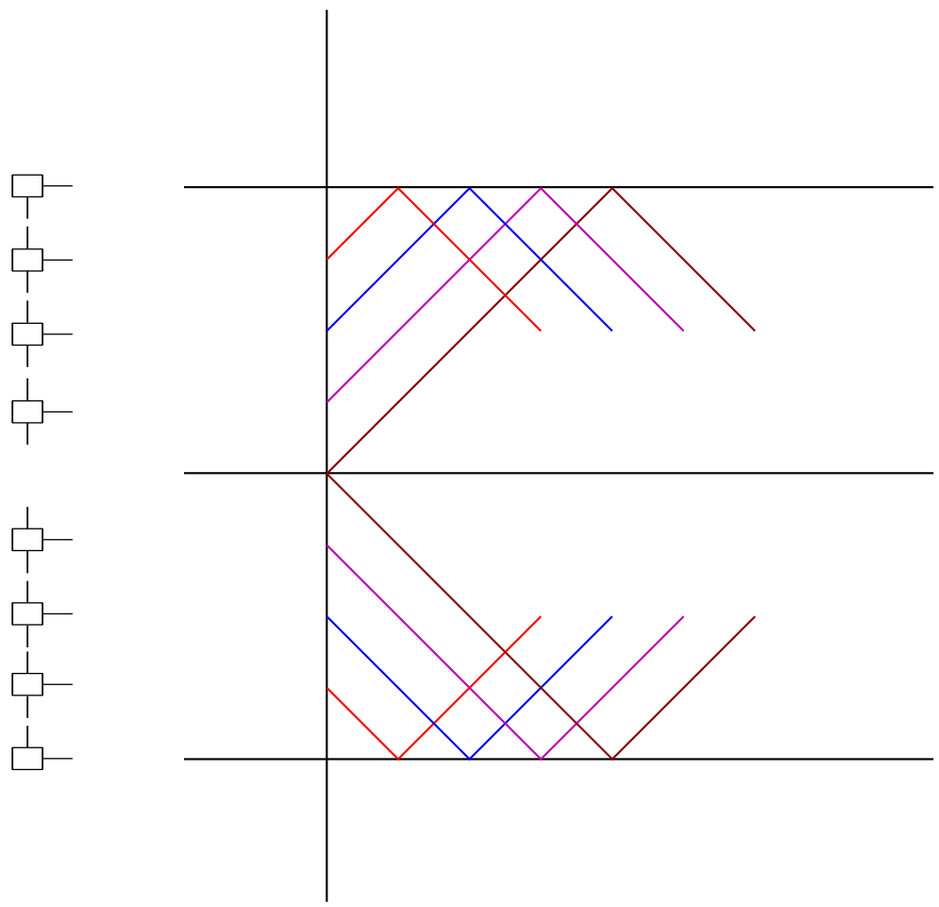

Imagine contracting sideways. State on the vertical slice will become a product state if we fold the network along the horizontal middle line (Banuls, Hastings, Verstraete, Cirac)

The folded network

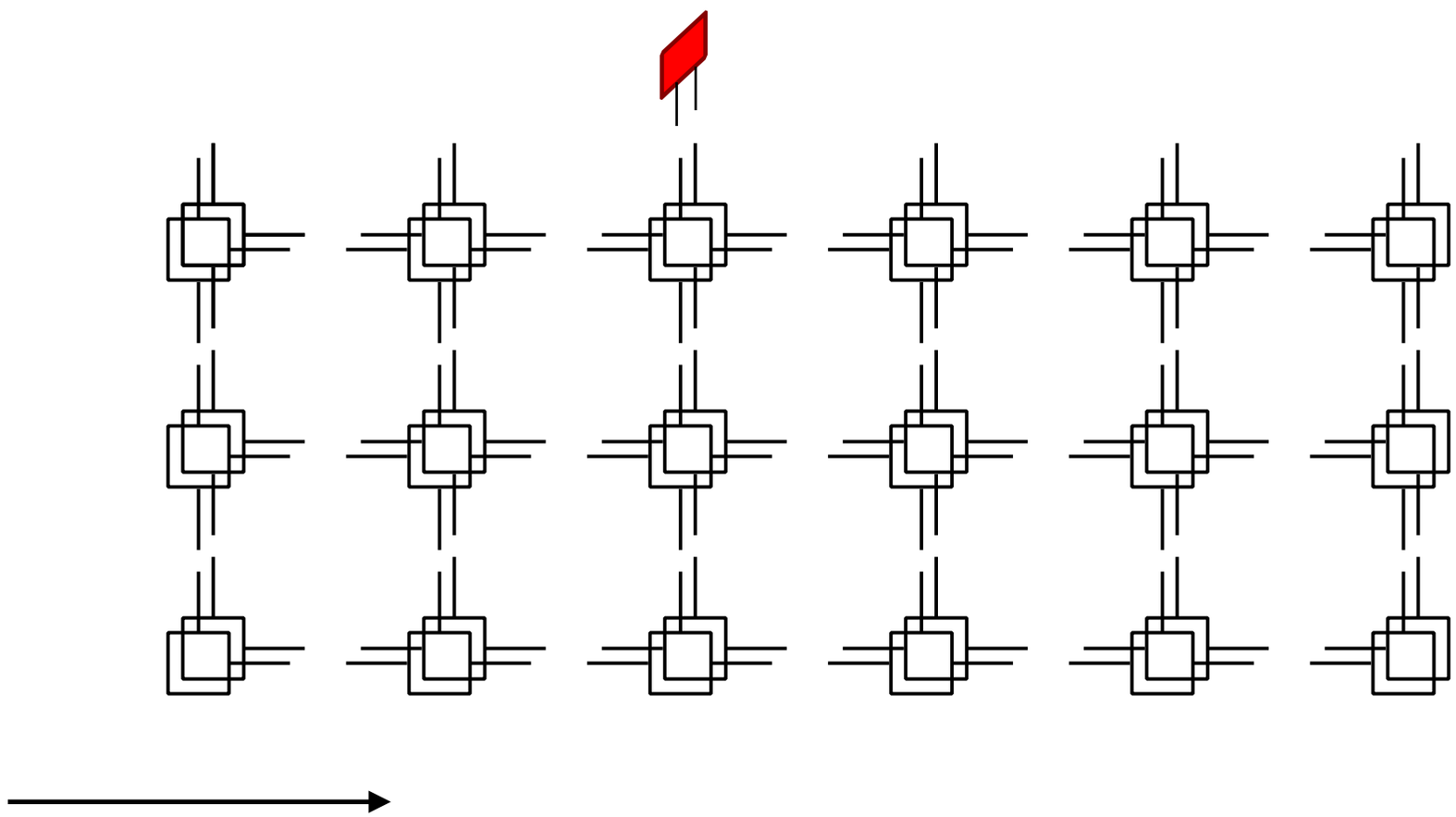

Move right until you reach a fixed point

Results from Folding

Ising Model (compare to known exact results)

(Banuls, Hastings, Verstraete, Cirac)

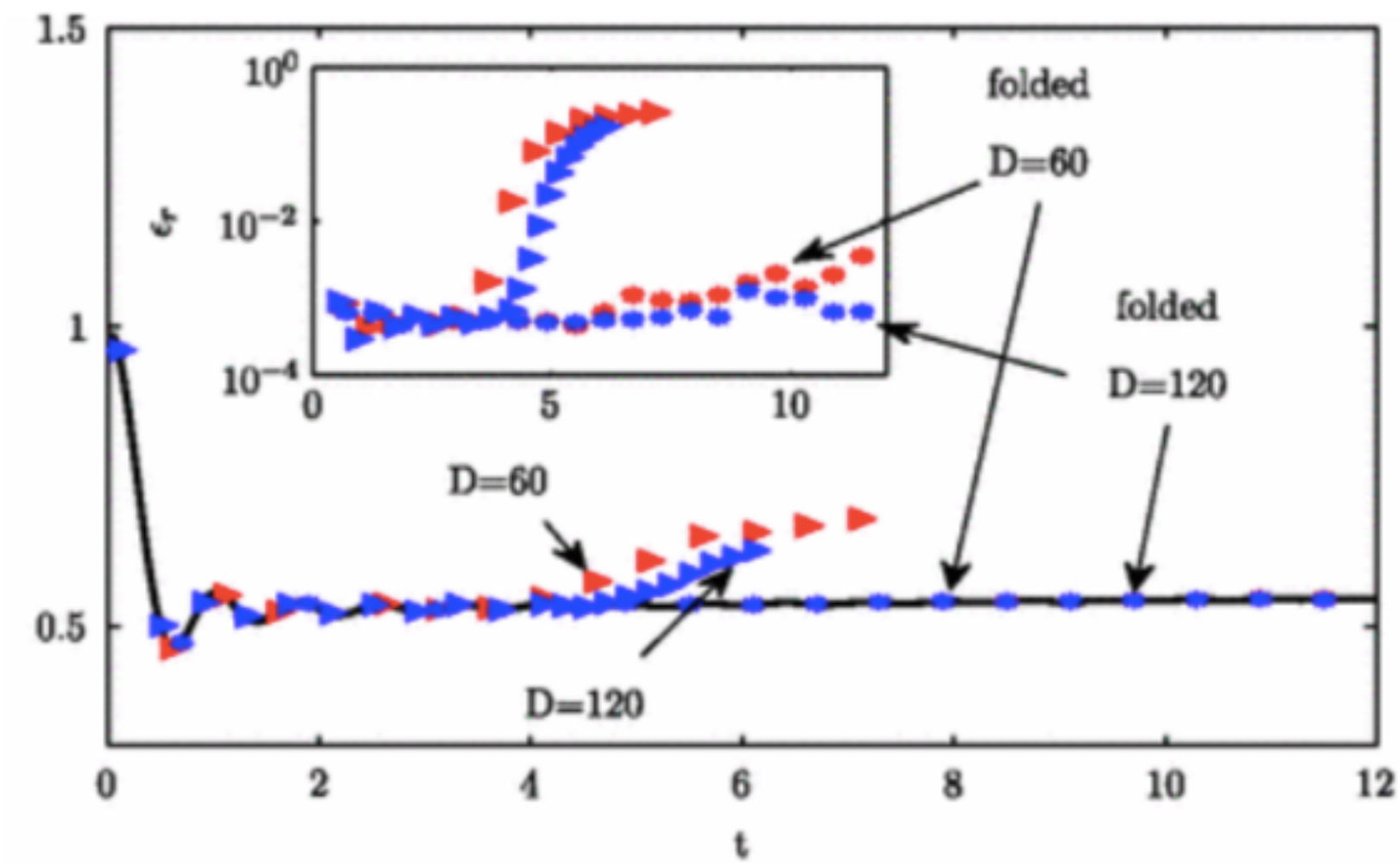

Food for Thought

What does entanglement in time mean?

Can we characterize it in various general settings?

How to truncate?

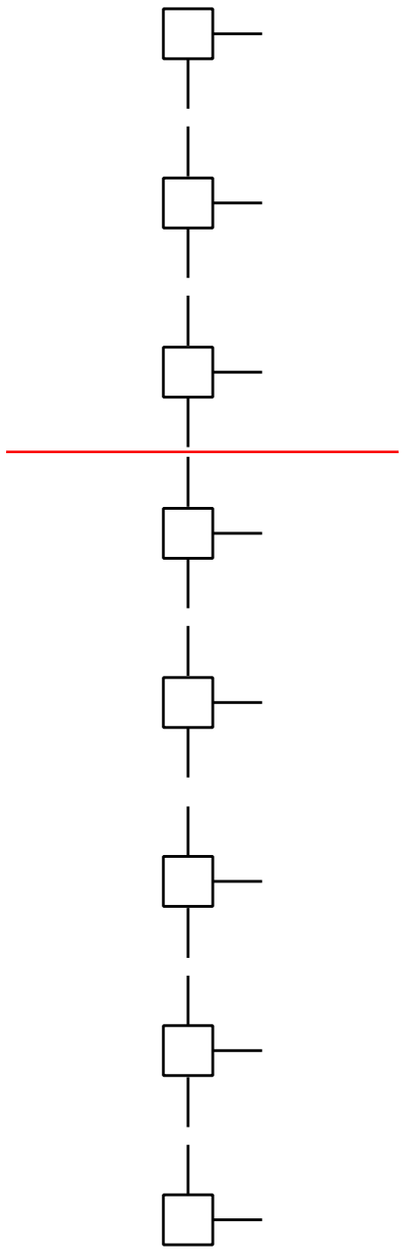

Let's say you want to find out how to truncate the bonds cutting across the red line

How to truncate?

Blue indicates dagger

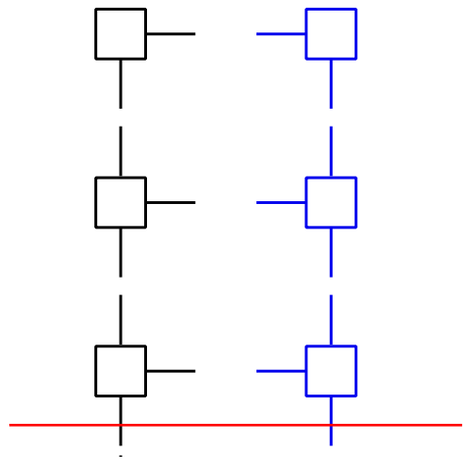

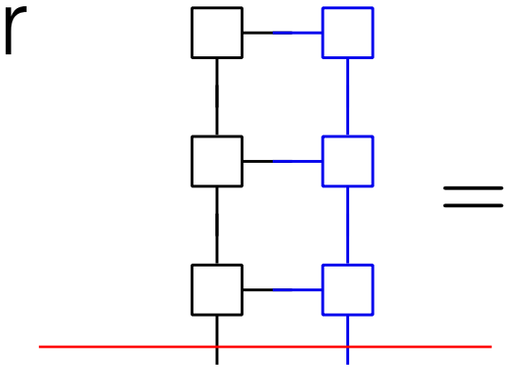

$$=: \Lambda_{\text{top}} = UDU^\dagger$$

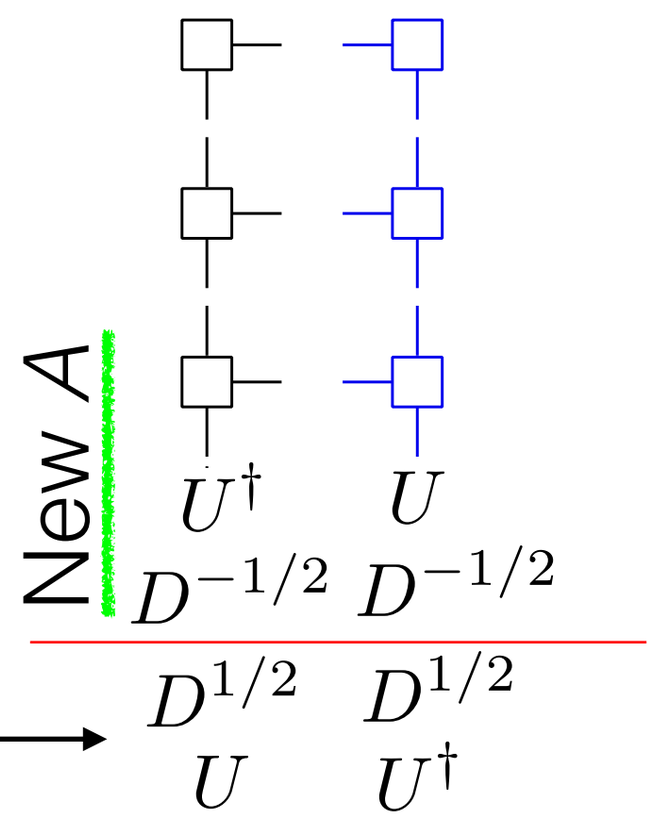

Guarantees $\Lambda_{\text{top}} = 1$

Absorb these into the tensor below

How to truncate?

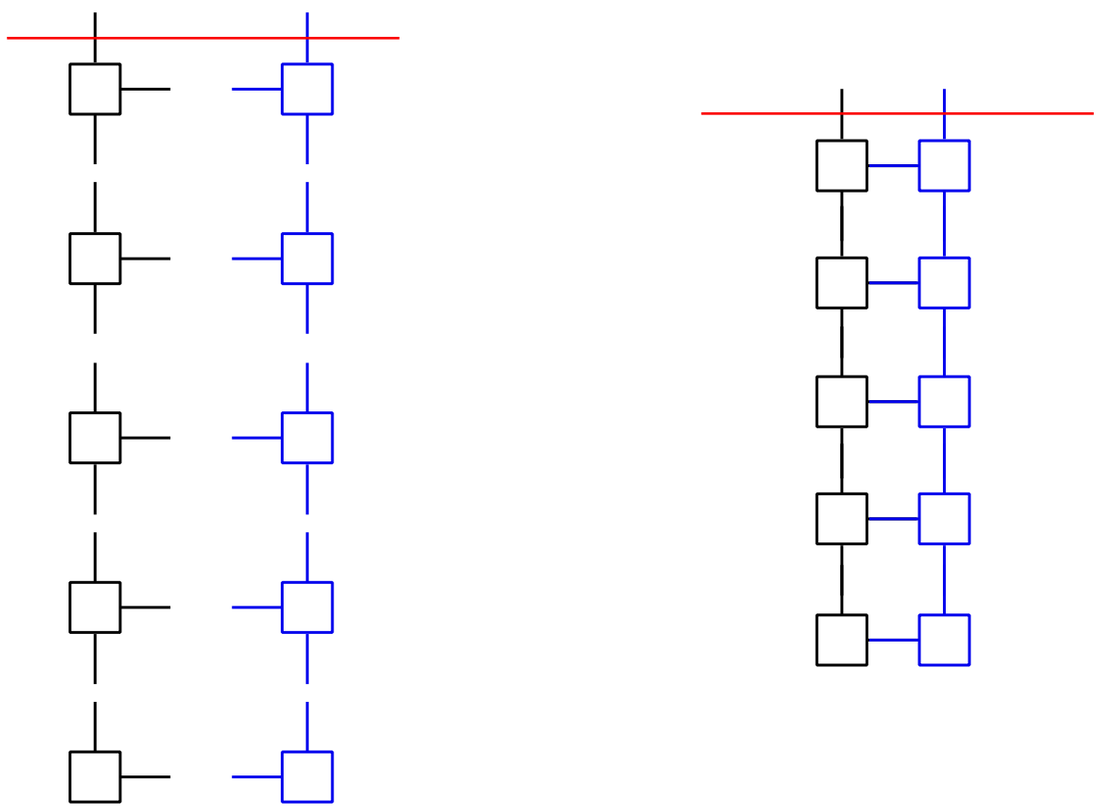

$$=: \Lambda_{\text{bottom}} = \rho$$

Truncate to the largest bdmax eigenvalues of ρ

"Normal method"

A New “Hybrid” Method

- Do the Λ_{top} step exactly as before

- For $\Lambda_{\mathrm{bottom}}$, instead of using the dagger, use the transpose

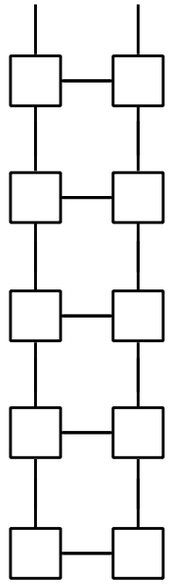

$$=: \Lambda_{\mathrm{bottom}} = USV^{\dagger}$$

- Truncate to the bdmax largest singular values

A New “Hybrid” Method

- The intuition is that in the normal top-to-bottom contraction of the network, the state on the right evolves with the same Hamiltonian as that on the left

- If we put the dagger on the right, the evolution upwards of $\Lambda_{\mathrm{bottom}}$ is described by a non-Hermitian Hamiltonian (if we take a continuum limit)

- Originally, we were working with continuous-in-time MPS, which led to this intuition

Results

$|X+\rangle$ state. Error in $\langle 1 \rangle$

Small *t*

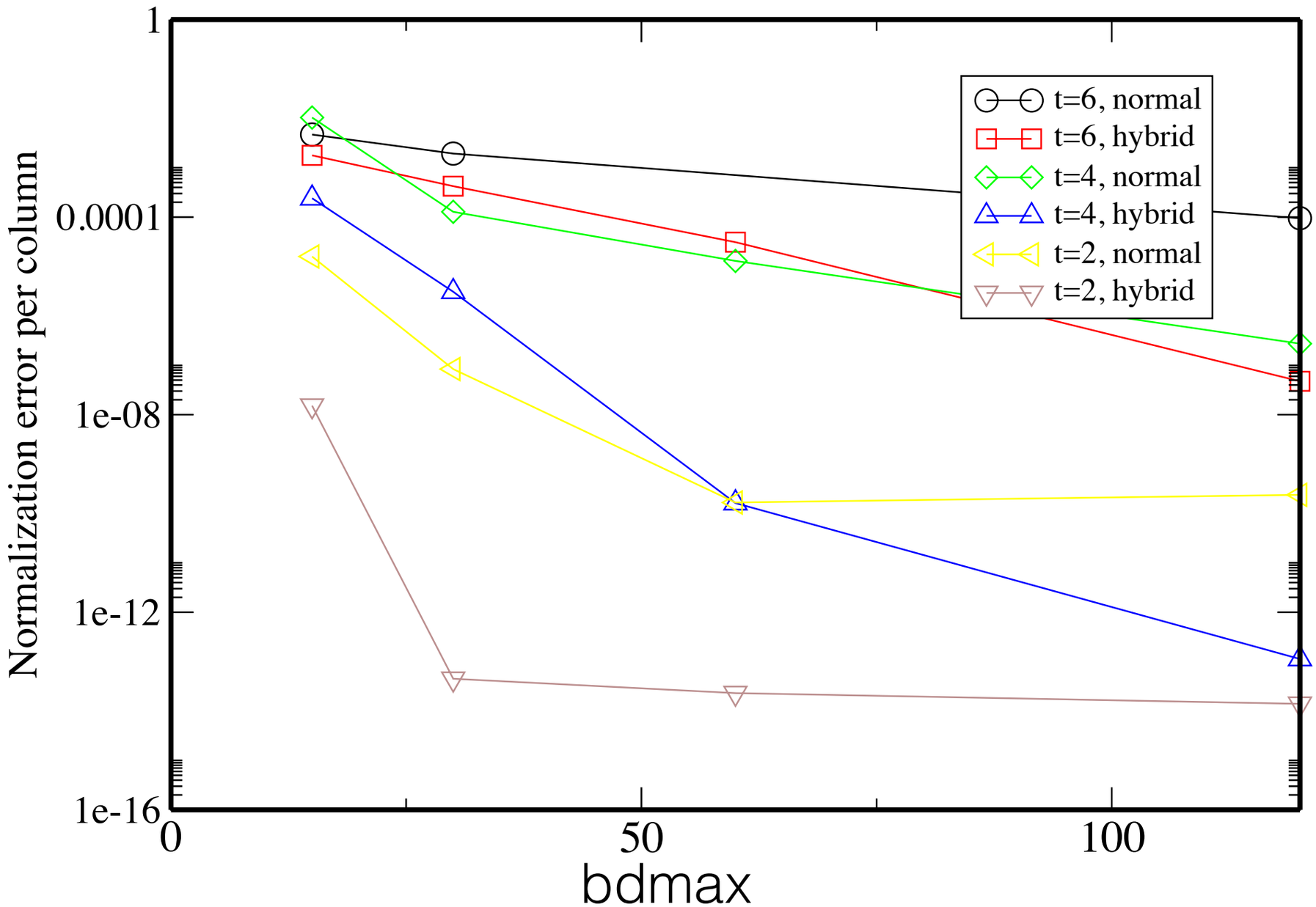

Results

$|X+\rangle$ state. Error in $\langle X \rangle$, compared to iTEBD

Small *t*

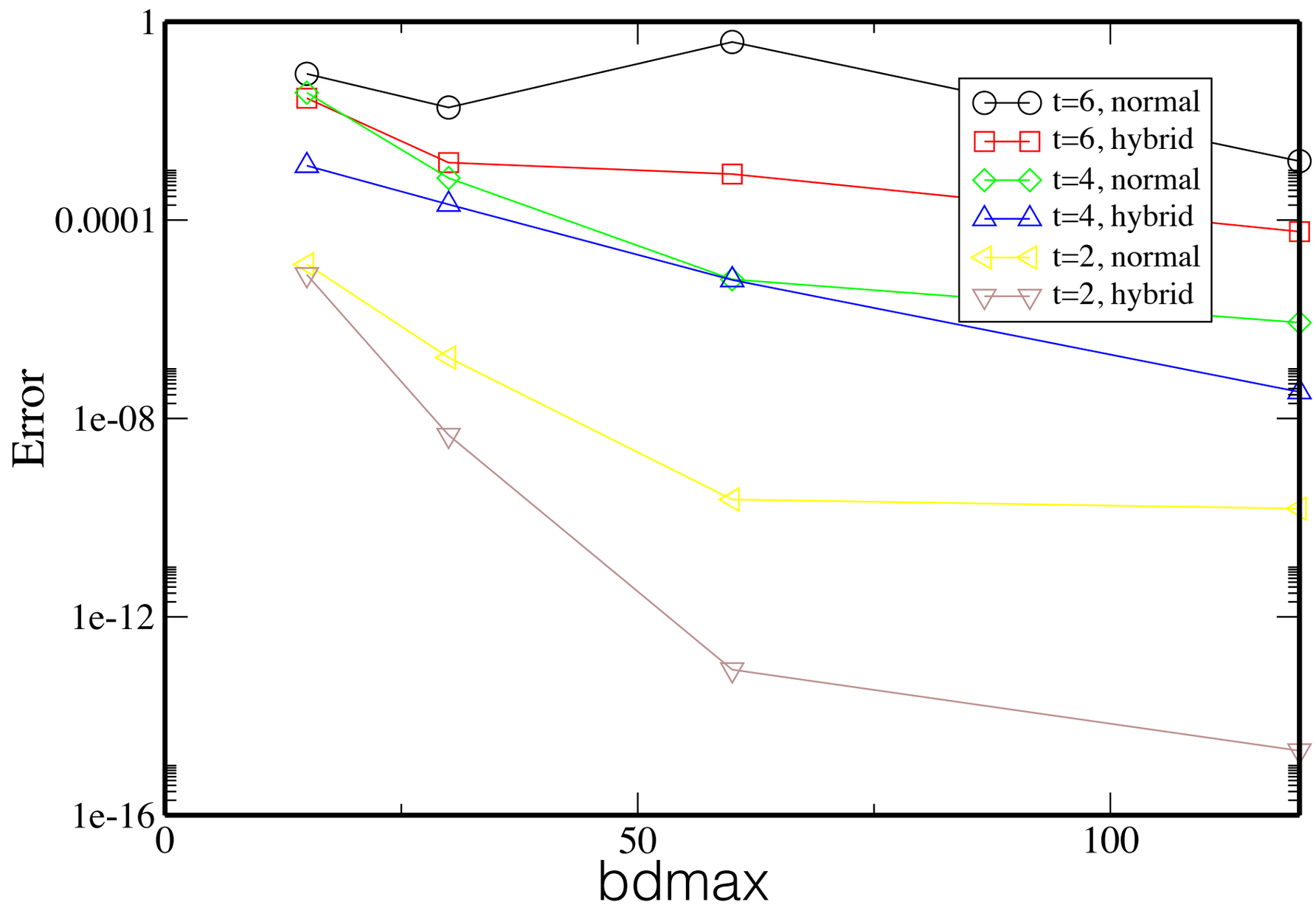

Results

$|X+\rangle$ state. t = 10.6. Errors compared to bdmax=240

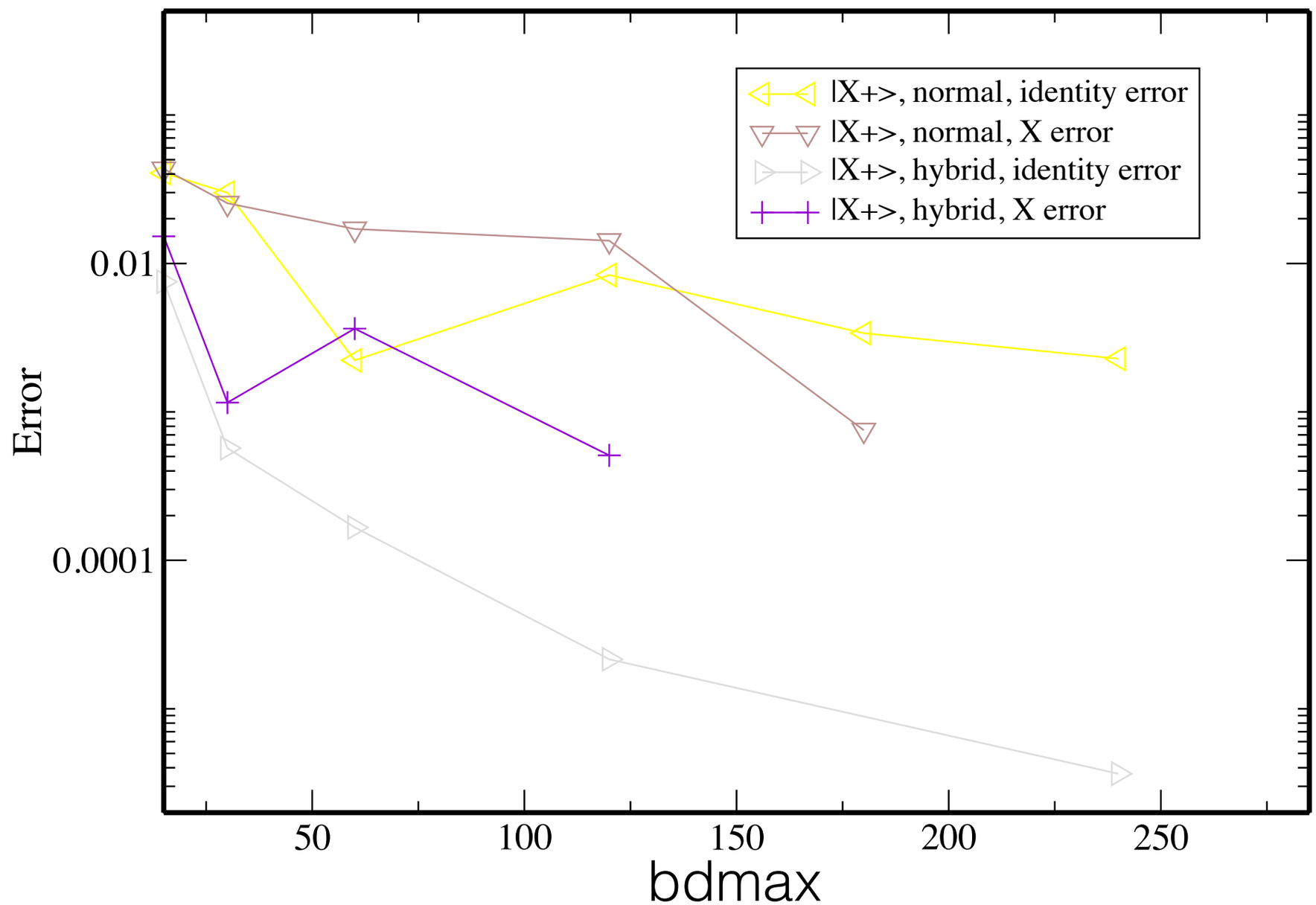

Results

$|X+\rangle$ state

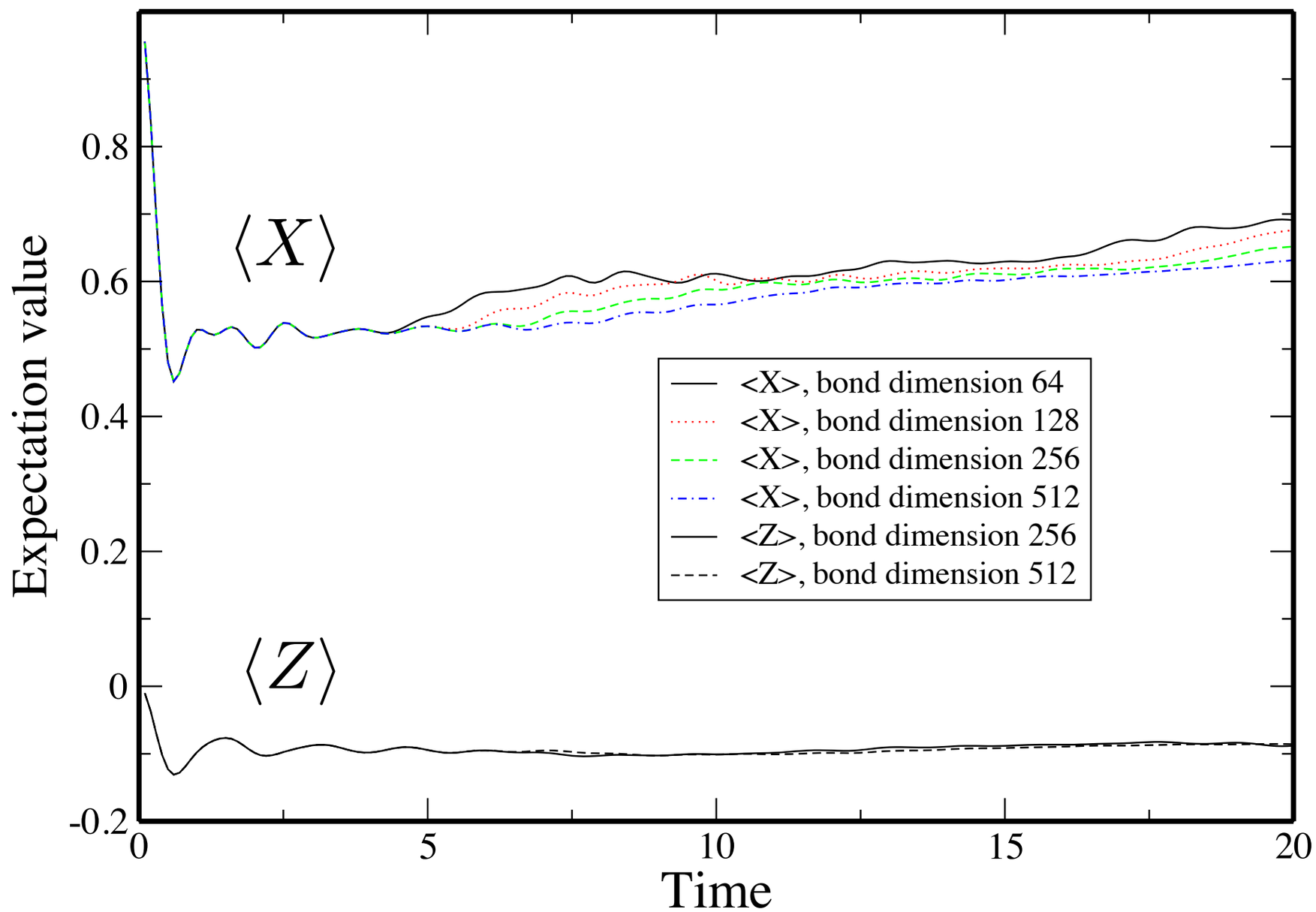

Results

$|X-\rangle$ state

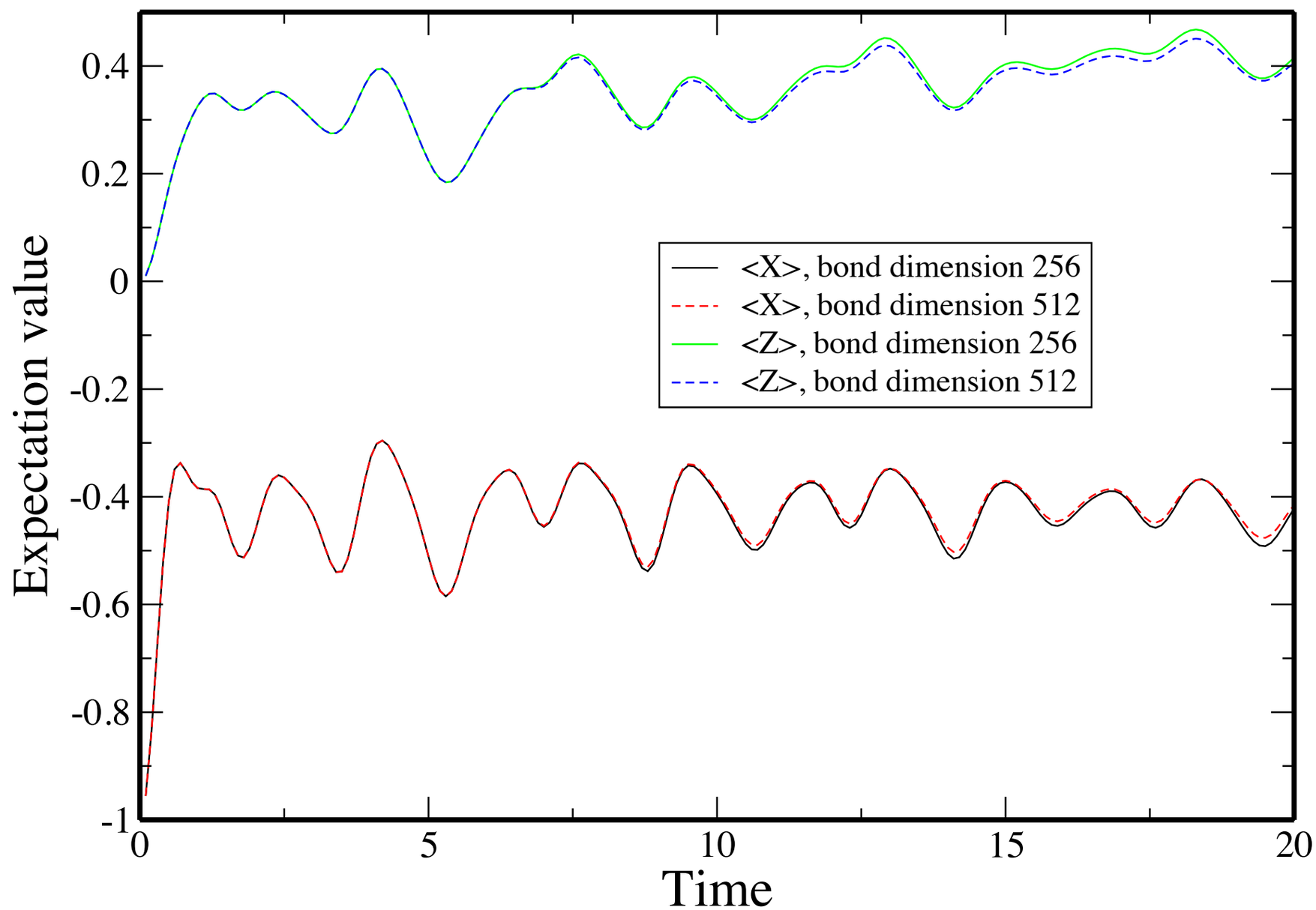

Conclusions

- We did better than previously
- Different initial states can behave very differently (at least for the observed period of time). Qualitatively different approaches to thermal behavior?


N-point functions
at times of order $N^{3/2}$
1-point functions
at times of order 1

Coda

Explorers are we, intrepid and bold,
Out in the wild, amongst wonders untold.